1865998
Andorra Photo Jewelry Box

Parts List

A.	Box Assembly	1 pc
B.	Key	1 pc
C.	Phillips Head Screwdriver	1 pc

∗ Please make sure that you have all the parts indicated above before you begin assembly of this item.
∗ This item should be assembled on a soft surface to prevent scratching the finish during assembly.

Assembly Instructions
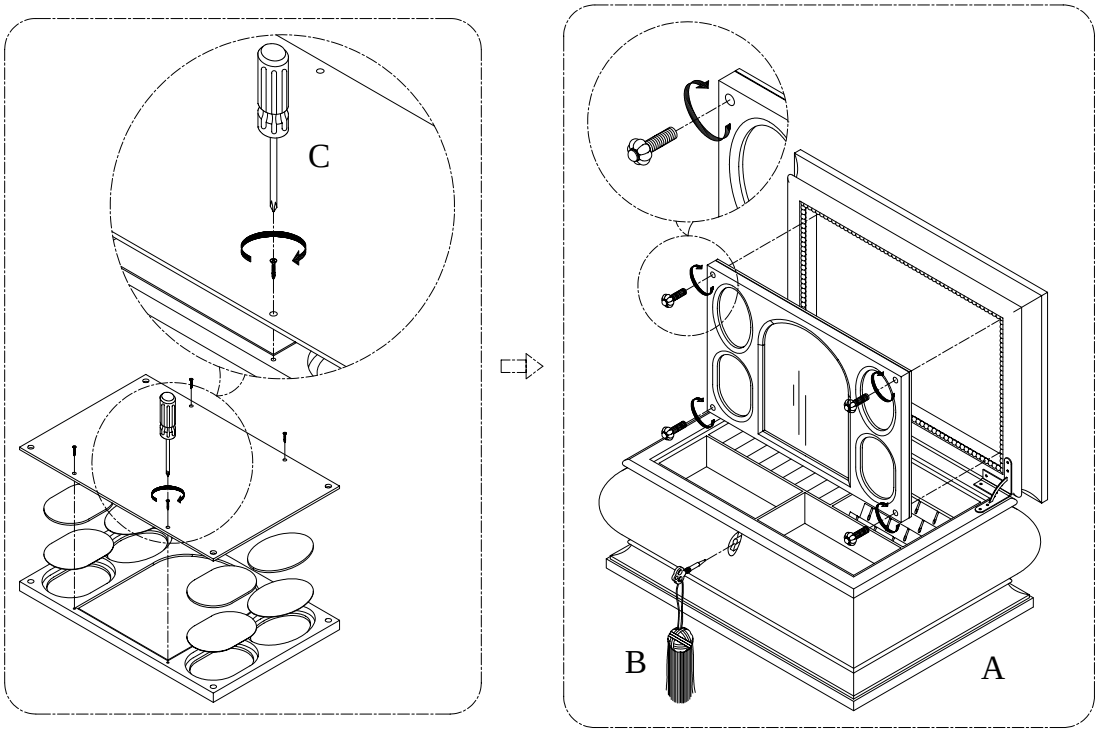
1. Use the Key (B) to open the Box Assembly (A). Loosen the bolts in four corners of lid of Box Assembly (A) by turning counterclockwise. See illustration.
2. Put the photo frame upside down on a soft surface. Loosen the Phillips Head Screws of back panel of the photo frame using Phillips Head Screwdriver (C). Remove the back panel and take out the oval sponge templets and oval paper templets. Use the oval paper templets to determine the correct size for your photos. Insert the photos into the photo frame and cover with oval paper templets, oval sponge templets and back panel. Replace the back panel with Phillips head screws using Phillips Head Screwdriver (C). See illustration.
3. Replace the photo frame in Box Assembly (A) and secure with bolts turning in a clockwise direction. See illustration.